# TD815 Series

## DIP4, DC Input, Photo Darlington Transistor Coupler

## Description

The TD815 series combine an AlGaAs infrared emitting diode as the emitter which is optically coupled to a silicon planar darlington phototransistor detector in a plastic DIP4 package with different lead forming options. With the robust coplanar double mold structure, TD815 series provide the most stable isolation feature.

## Features

- High isolation 5000 VRMS
- CTR flexibility available see order information
- DC input with transistor output
- Operating temperature range - 55 °C to 110 °C
- REACH compliance
- Halogen free
- MSL class 1
- Regulatory Approvals
  - UL - UL1577
  - VDE - EN60747-5-5(VDE0884-5)
  - CQC - GB4943.1, GB8898
  - cUL- CSA Component Acceptance Service Notice No. 5A

## Applications

- Sequence controller
- Telephone/FAX
- System appliances, measuring instrument
- Programmable logic controller

## SCHEMATIC

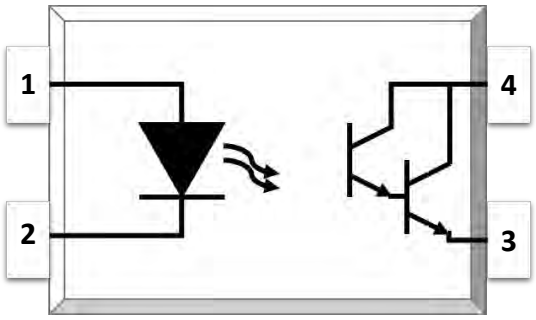


## PIN DEFINITION

1. Anode
2. Cathode
3. Emitter
4. Collector

## PACKAGE OUTLINE

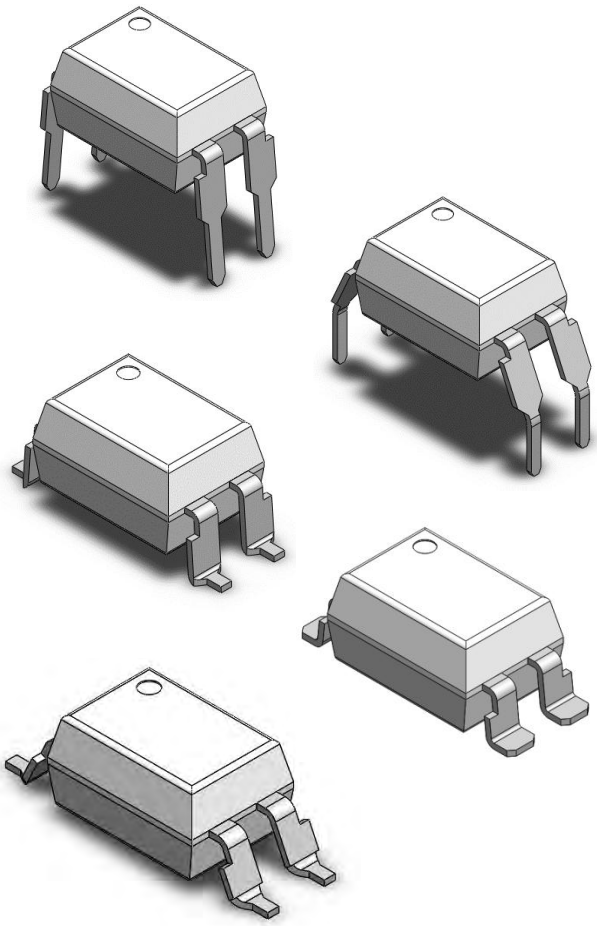

| ABSOLUTE MAXIMUM RATINGS | | | | |
|---|---|---|---|---|
| PARAMETER | SYMBOL | VALUE | UNIT | NOTE |
| INPUT | | | | |
| Forward Current | $I_F$ | 60 | mA | |
| Peak Forward Current | $I_{FP}$ | 1 | A | 1 |
| Reverse Voltage | $V_R$ | 6 | V | |
| Input Power Dissipation | $P_I$ | 100 | mW | |
| OUTPUT | | | | |
| Collector - Emitter Voltage | $V_{CEO}$ | 40 | V | |
| Emitter - Collector Voltage | $V_{ECO}$ | 6 | V | |
| Collector Current | $I_C$ | 80 | mA | |
| Output Power Dissipation | $P_O$ | 150 | mW | |
| COMMON | | | | |
| Total Power Dissipation | Ptot | 200 | mW | |
| Isolation Voltage | Viso | 5000 | Vrms | 2 |
| Operating Temperature | Topr | -55~110 | °C | |
| Storage Temperature | Tstg | -55~125 | °C | |
| Soldering Temperature | Tsol | 260 | °C | |

Note 1. 100μs pulse, 100Hz frequency

Note 2. AC For 1 Minute, R.H. = 40 ~ 60%

| ELECTRICAL OPTICAL CHARACTERISTICS at Ta=25°C | | | | | | | |
|---|---|---|---|---|---|---|---|
| PARAMETER | SYMBOL | MIN | TYP. | MAX. | UNIT | TEST CONDITION | NOTE |
| INPUT | | | | | | | |
| Forward Voltage | $V_F$ | - | 1.24 | 1.4 | V | IF=10mA | |
| Reverse Current | $I_R$ | - | - | 10 | μA | VR=6V | |
| Input Capacitance | Cin | - | 10 | - | pF | V=0, f=1kHz | |
| OUTPUT | | | | | | | |
| Collector Dark Current | $I_{CEO}$ | - | - | 100 | nA | VCE=10V, IF=0 | |
| Collector-Emitter Breakdown Voltage | $BV_{CEO}$ | 40 | - | - | V | IC=0.1mA, IF=0 | |
| Emitter-Collector Breakdown Voltage | $BV_{ECO}$ | 6 | - | - | V | IE=0.1mA, IF=0 | |
| TRANSFER CHARACTERISTICS | | | | | | | |
| Current Transfer Ratio | CTR | 600 | - | 7500 | % | IF=1mA, VCE=2V | |
| Collector-Emitter Saturation Voltage | $V_{CE(sat)}$ | - | 0.8 | 1.0 | V | IF=20mA, IC=5mA | |
| Isolation Resistance | $R_{ISO}$ | 10^12 | 10^14 | - | Ω | DC500V, 40 ~ 60% R.H. | |
| Floating Capacitance | $C_{IO}$ | - | 0.4 | 1 | pF | V=0, f=1MHz | |
| Response Time (Rise) | tr | - | 95 | 300 | μs | VCE=2V, IC=10mA RL=100Ω | 3 |
| Response Time (Fall) | tf | - | 84 | 250 | μs | | 3 |
| Cut-off Frequency | fc | - | 1 | - | kHz | VCE=2V, IC=10mA RL=100Ω,-3dB | 4 |

Note 3. Fig.12&13

Note 4. Fig.14

## CHARACTERISTIC CURVES

**Fig.1 Forward Current vs. Ambient Temperature**

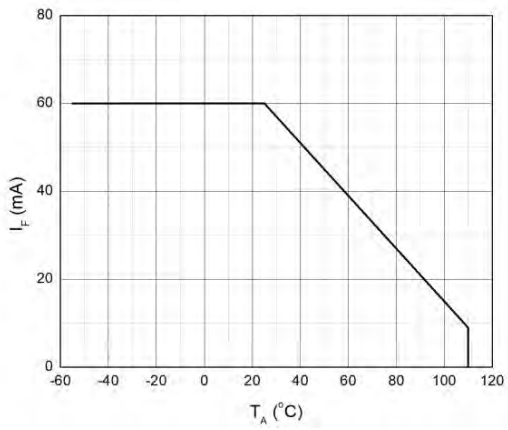


**Fig.2 Collector Power Dissipation vs. Ambient Temperature**

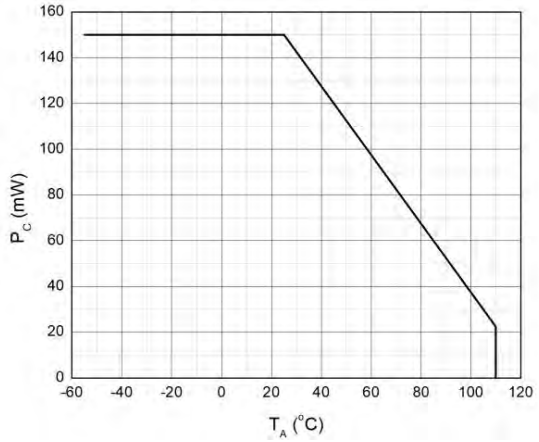


**Fig.3 Forward Current vs. Forward Voltage**

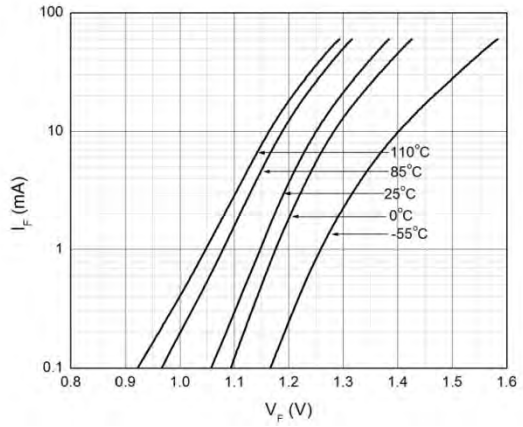


**Fig.4 Collector Dark Current vs. Ambient Temperature**

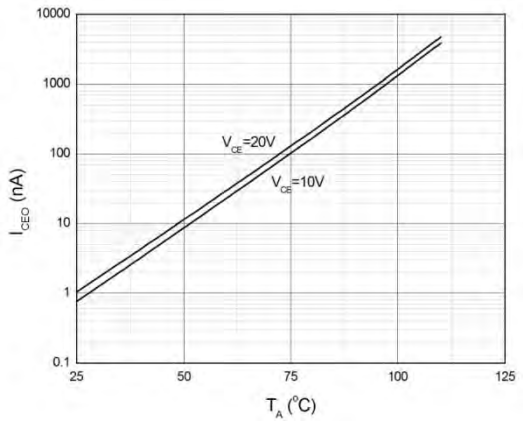


**Fig.5 Collector Current vs. Collector-emitter Voltage**

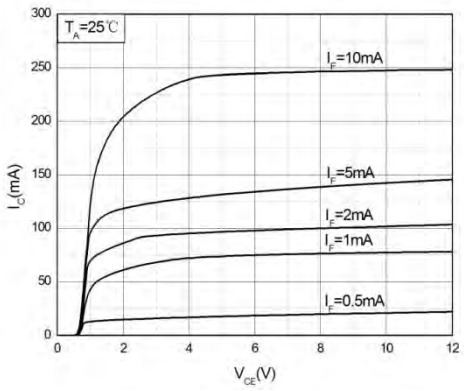


**Fig.6 Collector Current vs. Collector-emitter Voltage**

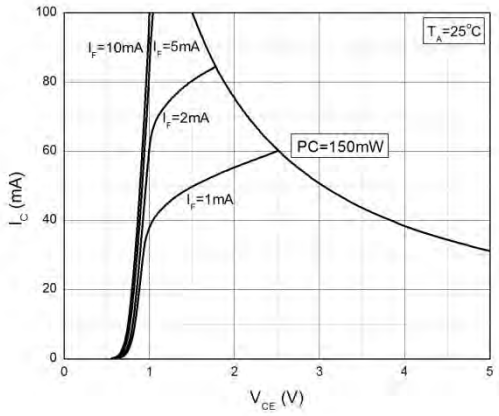

## CHARACTERISTIC CURVES

**Fig.7 Normalized Current Transfer Ratio vs. Forward Current**

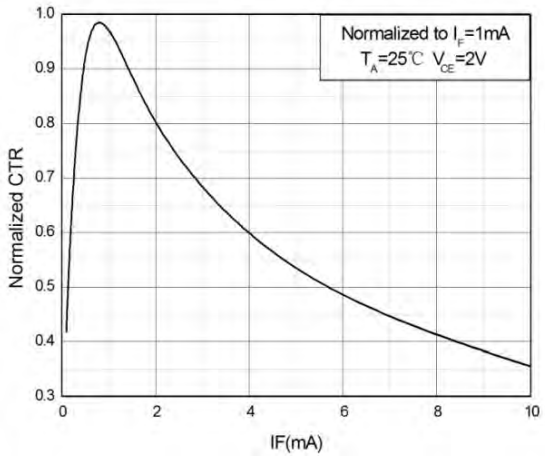


**Fig.8 Normalized Current Transfer Ratio vs. Ambient Temperature**

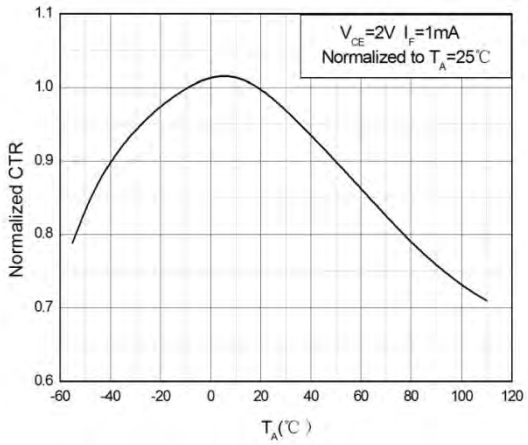


**Fig.9 Collector-emitter Saturation Voltage vs. Ambient Temperature**

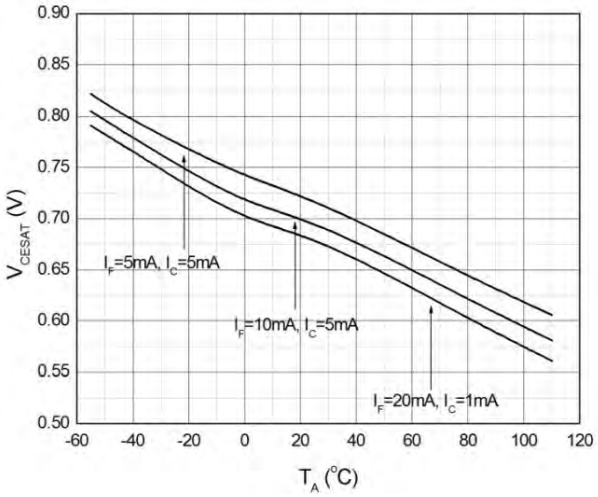


**Fig.10 Switching Time vs. Load Resistance**

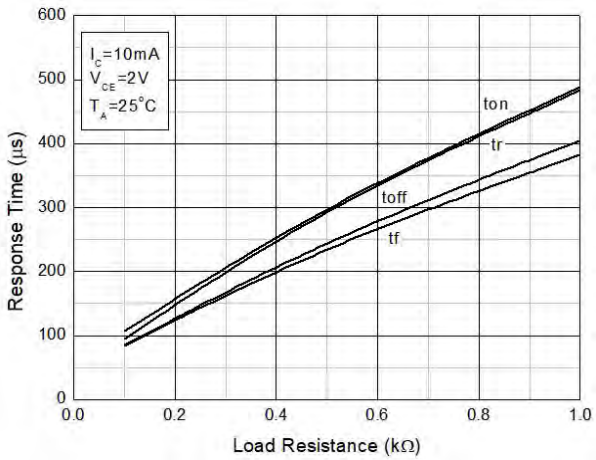


**Fig.11 Frequency Response**

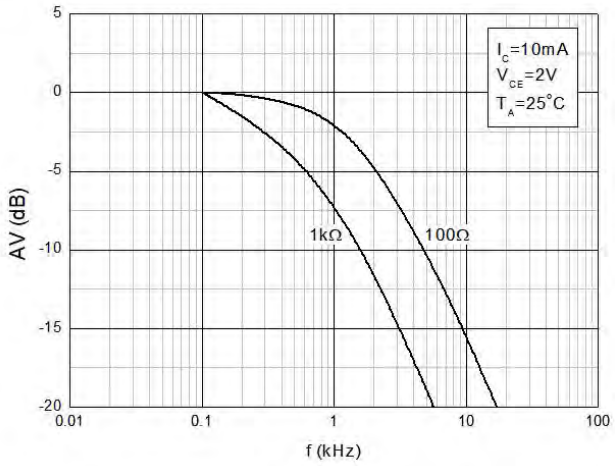


## TEST CIRCUITS

**Fig.12 Test Circuits of Response Time**

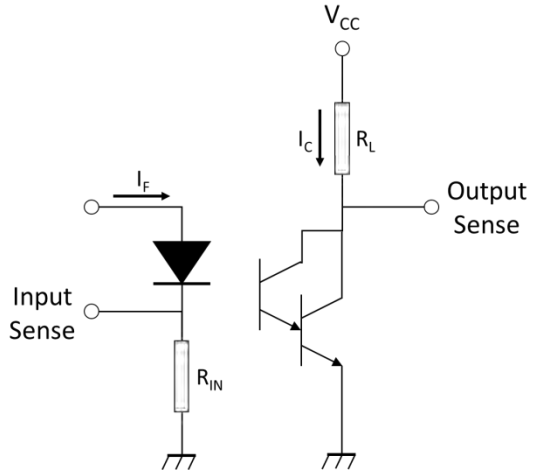


**Fig.13 Curves of Response Time**

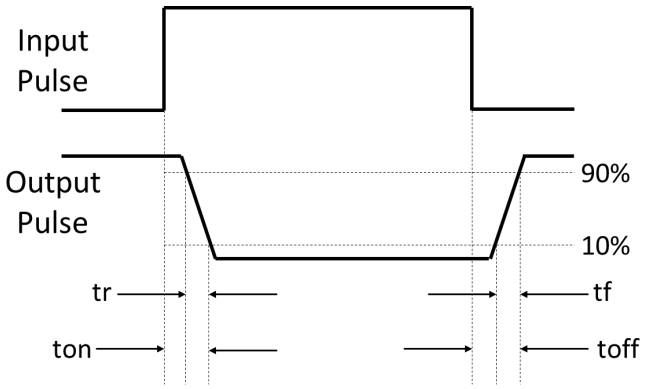


**Fig.14 Test Circuits of Frequency Response**

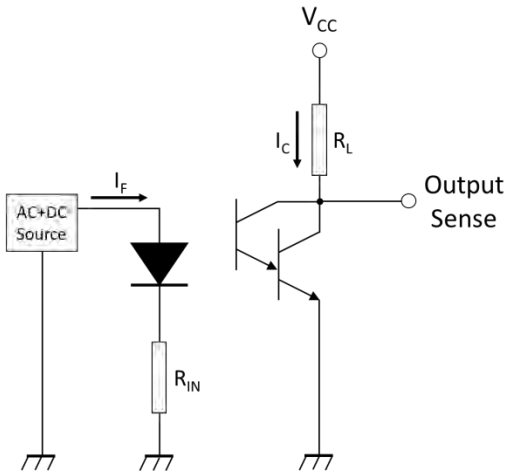

## PACKAGE DIMENSIONS (Dimensions in mm unless otherwise stated)

### Standard DIP – Through Hole (DIP Type)

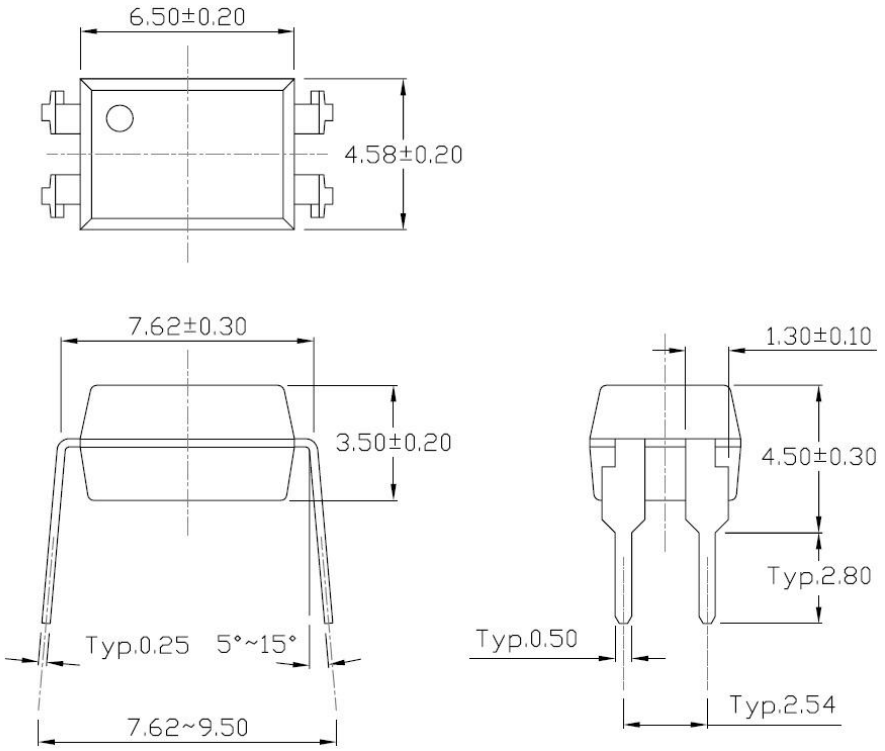


### Gullwing (400mil) Lead Forming – Through Hole (M Type)

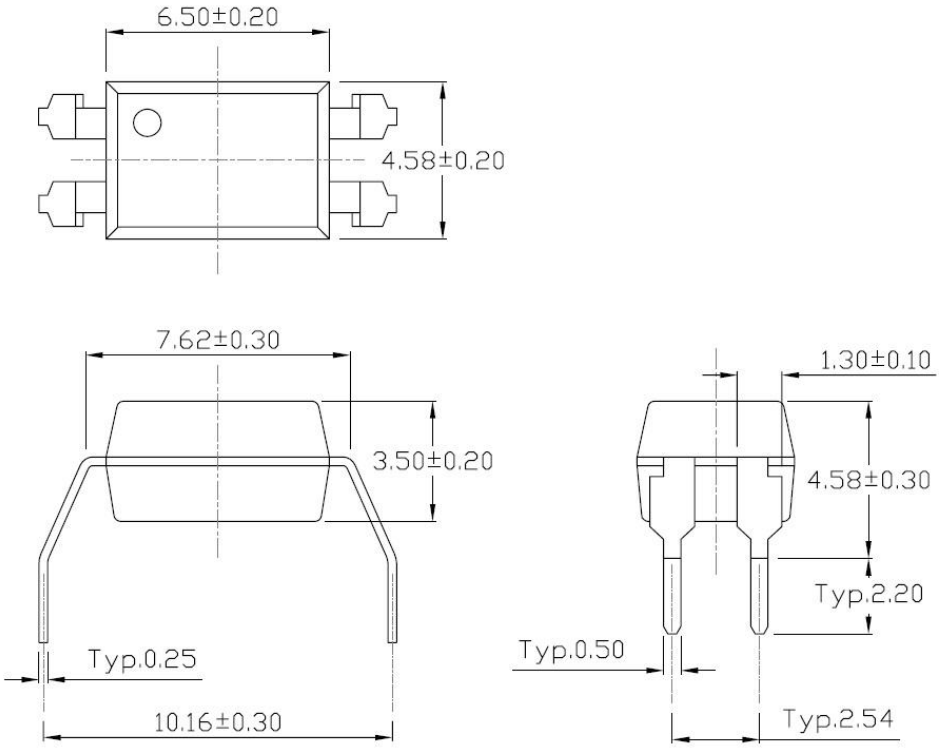

## PACKAGE DIMENSIONS (Dimensions in mm unless otherwise stated)

### Surface Mount Lead Forming (S Type)

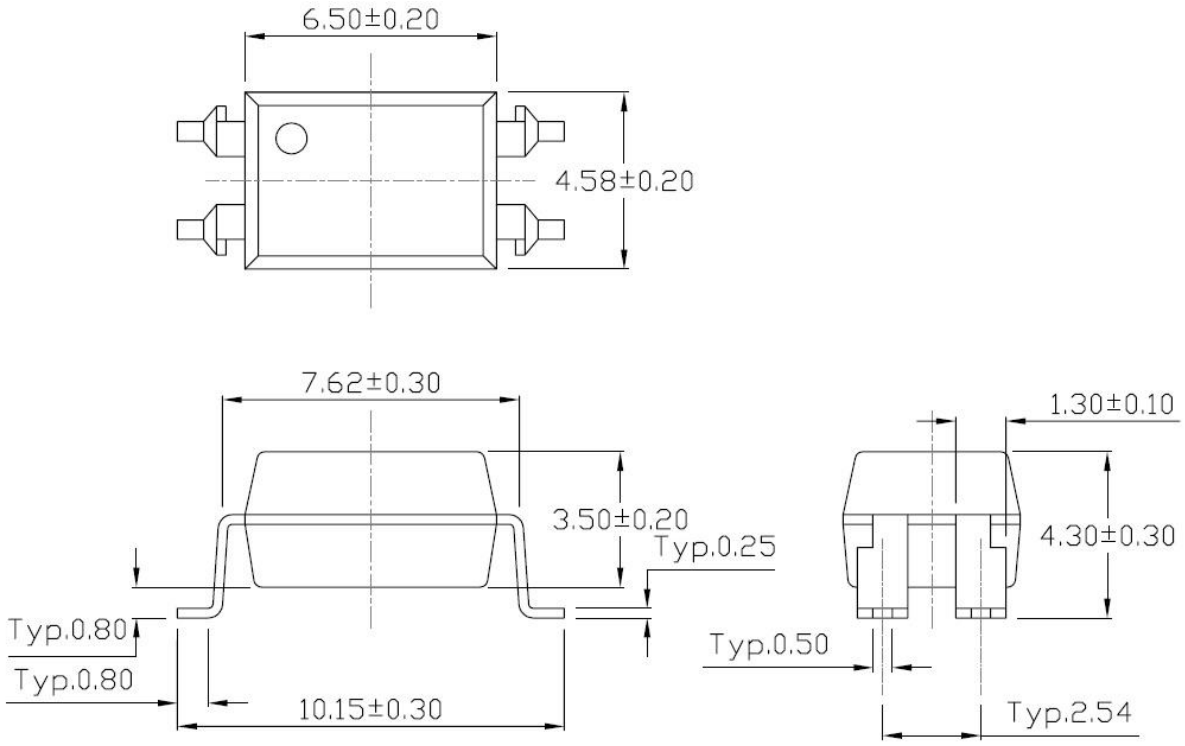


### Surface Mount (Low Profile) Lead Forming (SL Type)

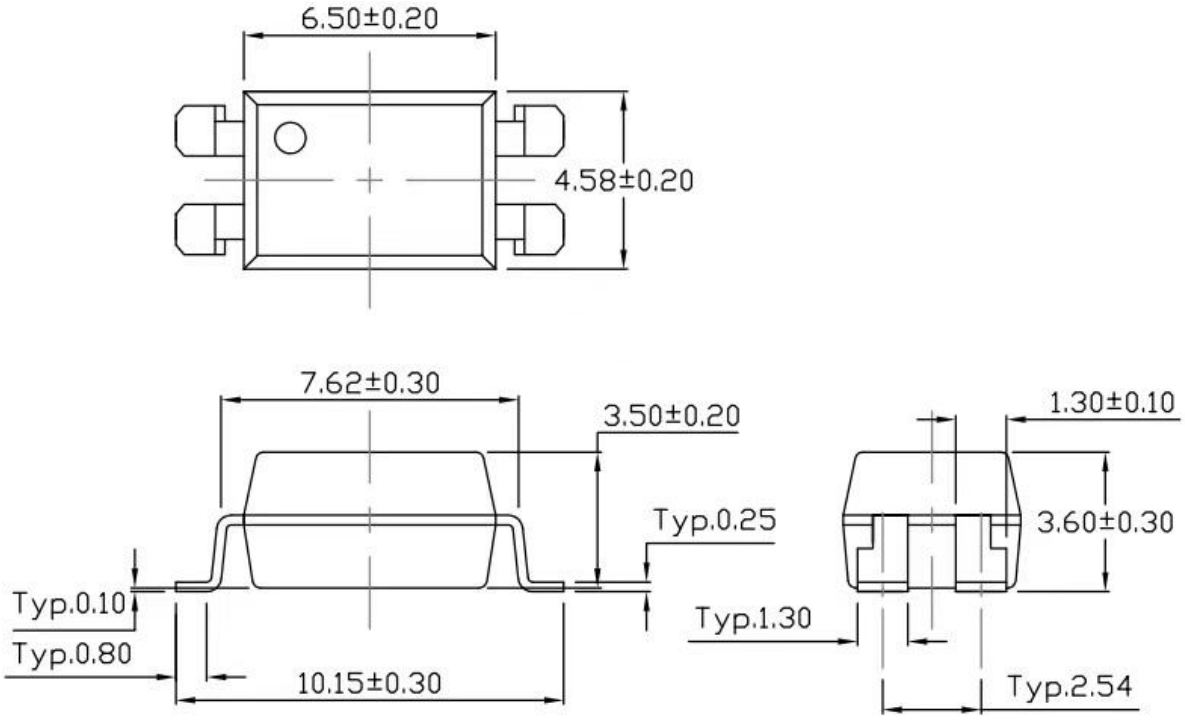

## PACKAGE DIMENSIONS (Dimensions in mm unless otherwise stated)

**Surface Mount (Gullwing) Lead Forming (SLM Type)**

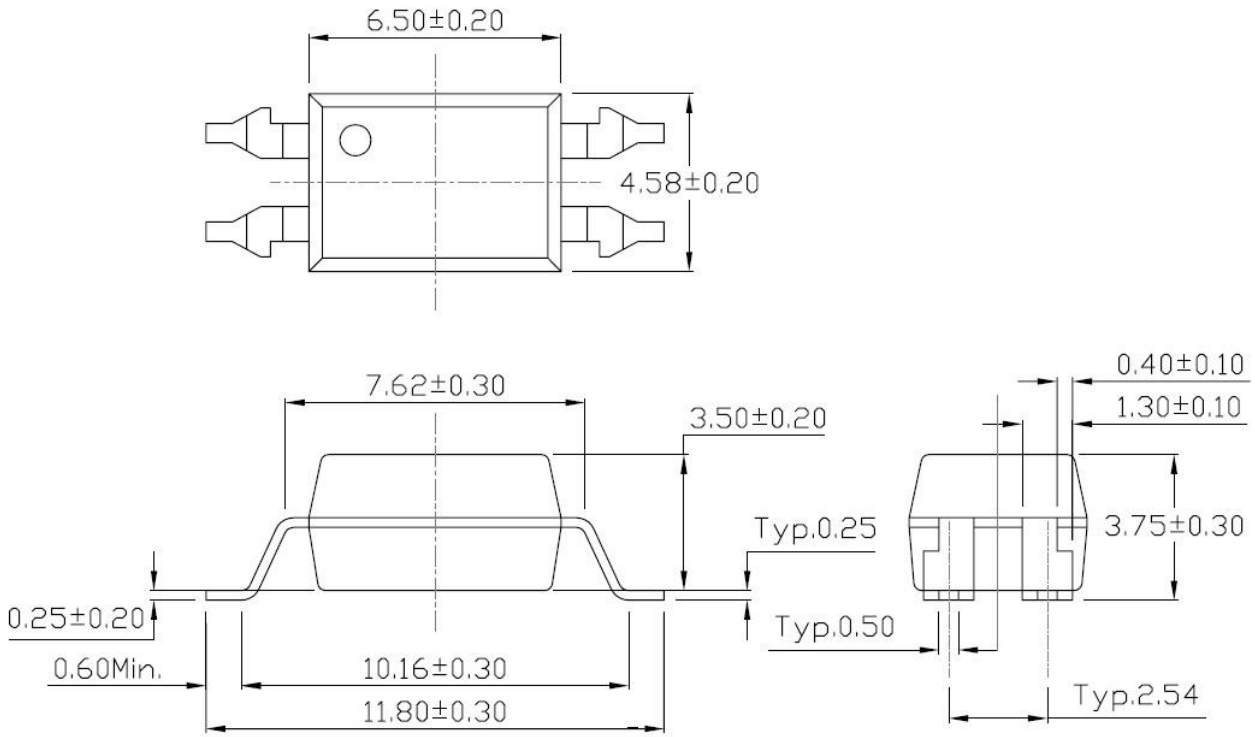


## RECOMMENDED SOLDER MASK (Dimensions in mm unless otherwise stated)

**Surface Mount Lead Forming & Surface Mount (Low Profile) Lead Forming**

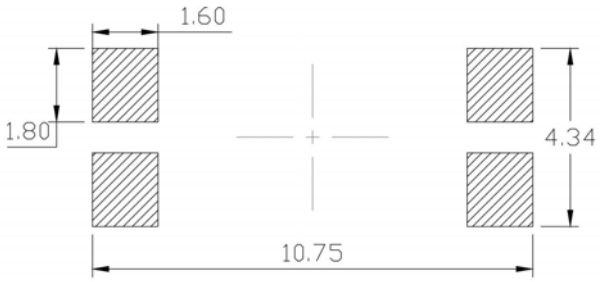


**Surface Mount (Gullwing) Lead Forming**

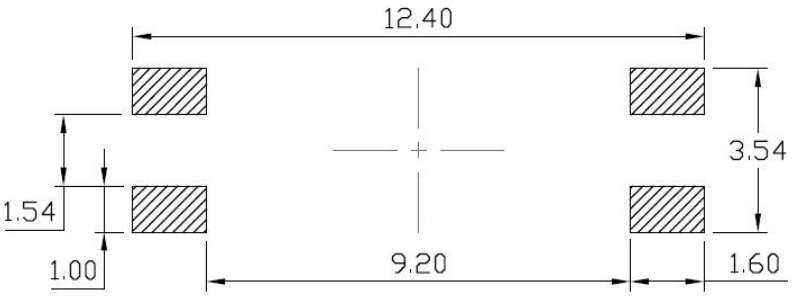

## TUBE SPECIFICATIONS (Dimensions in mm unless otherwise stated)

### Standard DIP

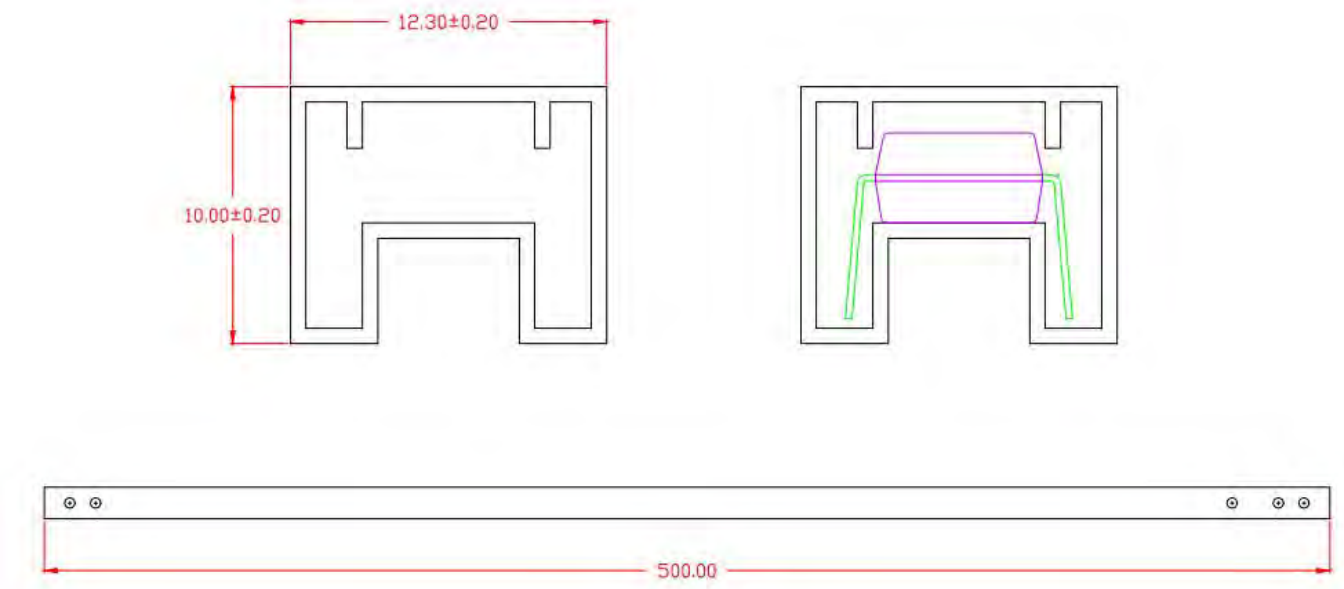


### Standard M

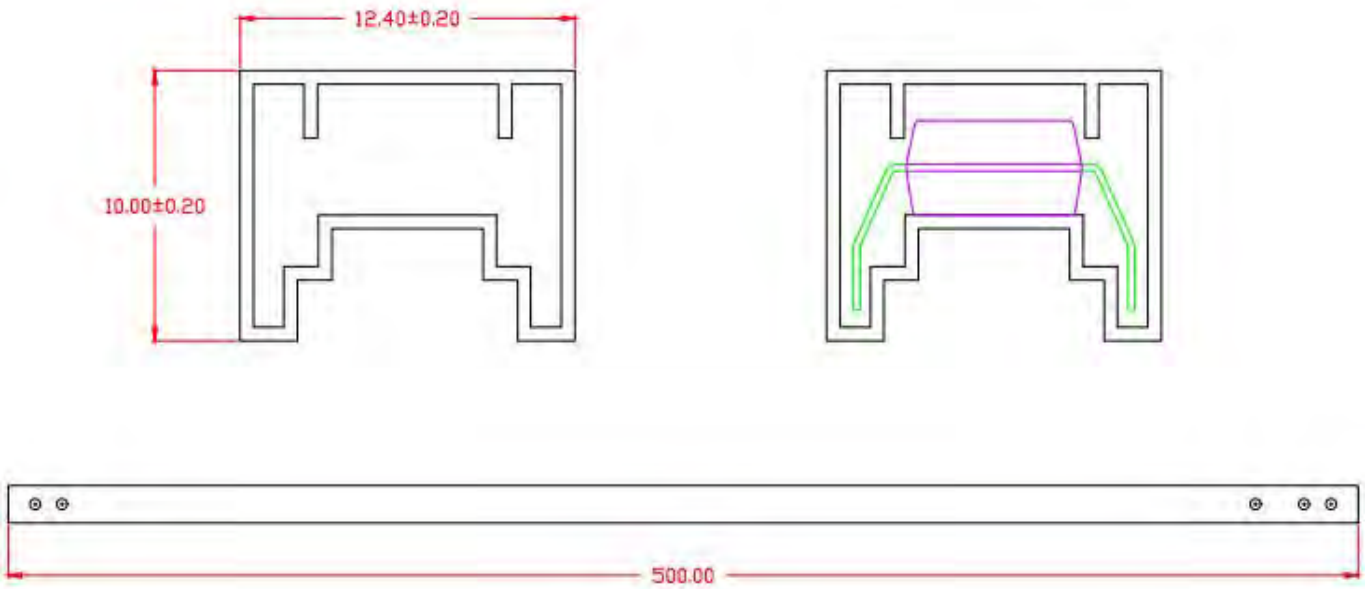

## BOX SPECIFICATIONS (Tube Type)

### Inner Box

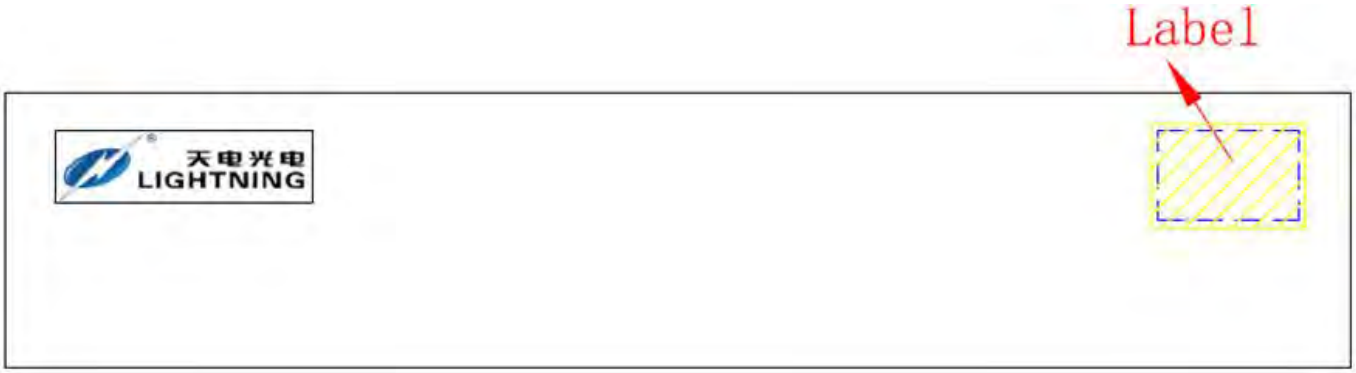


- L x W x H = 52.5cm x 10.7cm x 4.7cm

### Outer Box

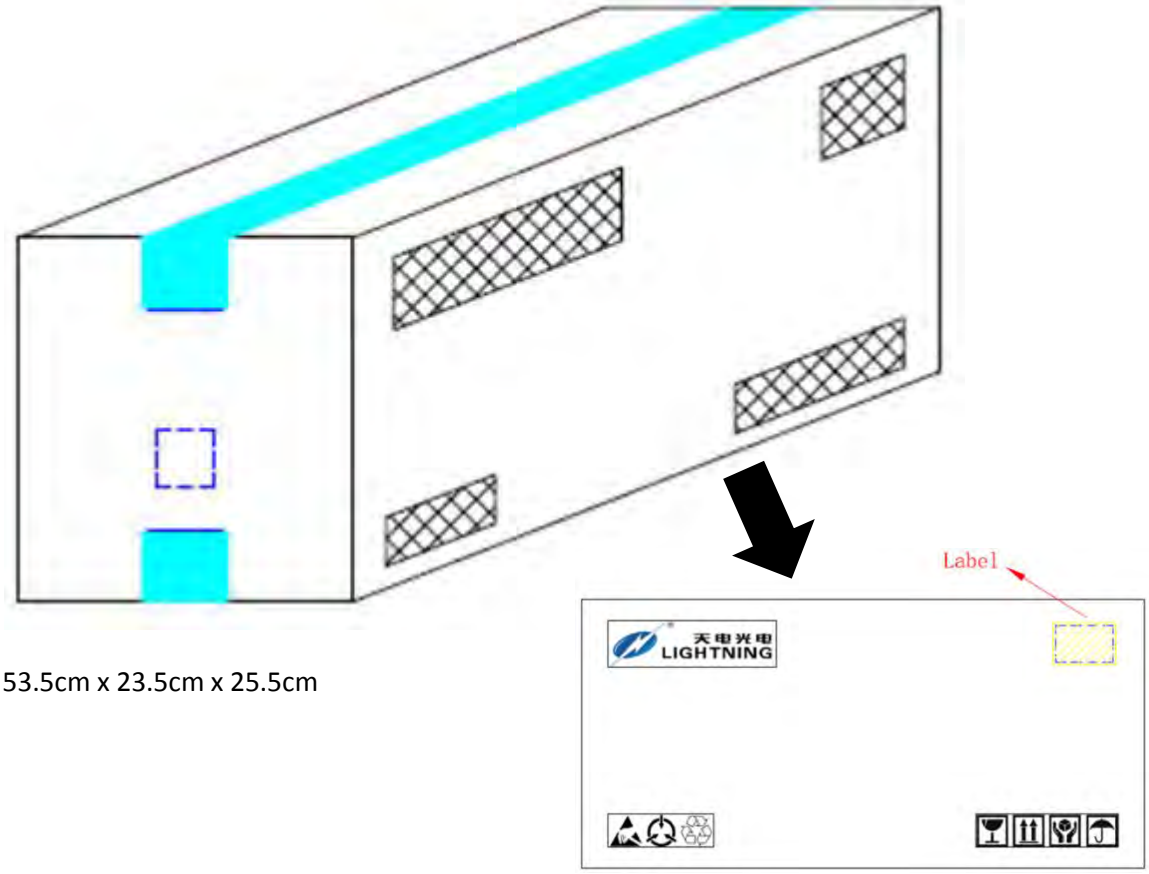


- L x W x H = 53.5cm x 23.5cm x 25.5cm

## CARRIER TAPE SPECIFICATIONS (Dimensions in mm unless otherwise stated)

**Option S(T1)**

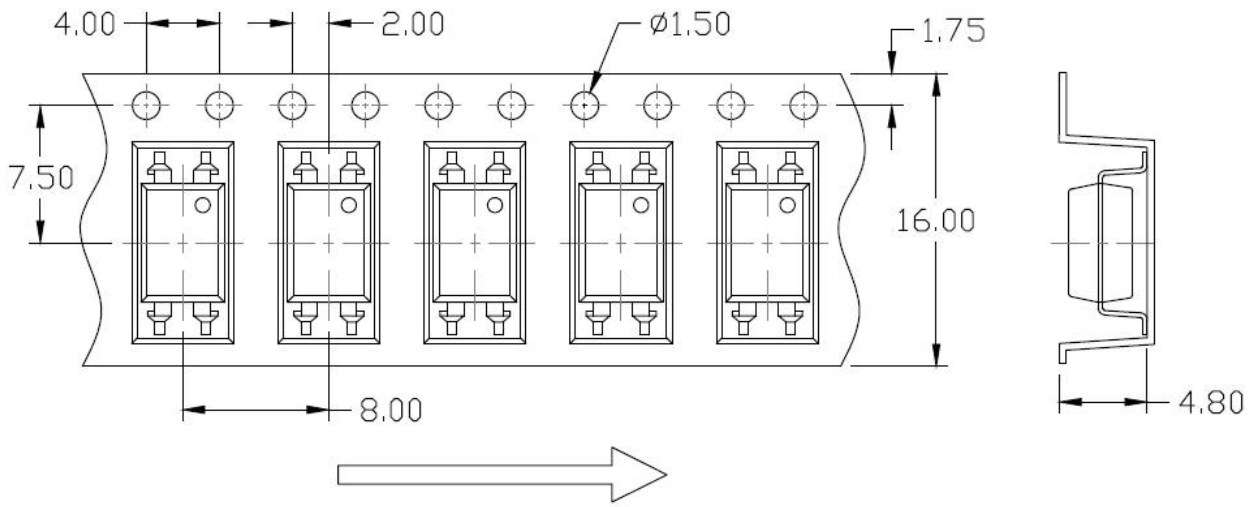


**Option S(T2)**

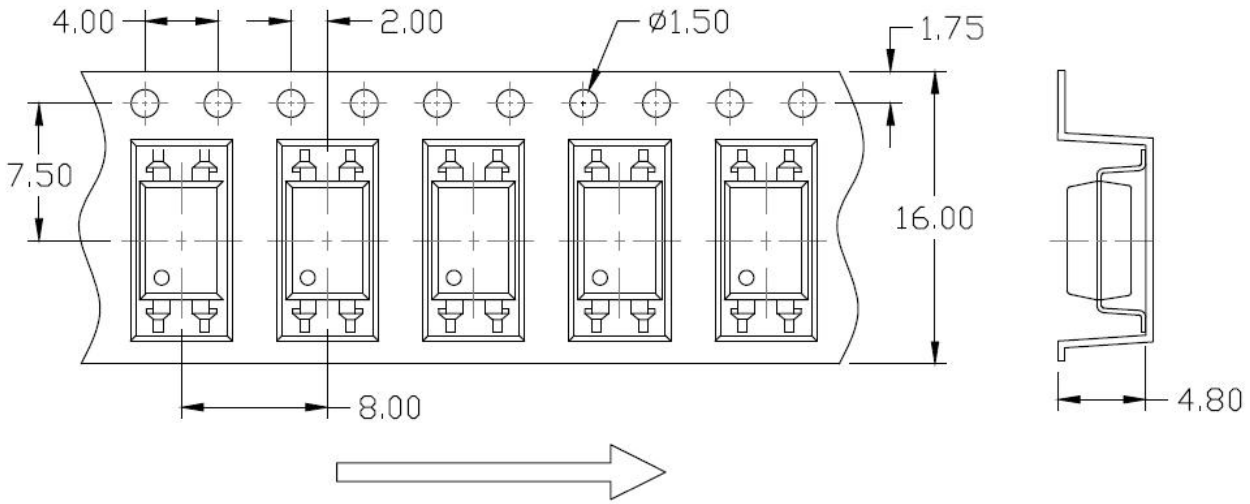

## CARRIER TAPE SPECIFICATIONS (Dimensions in mm unless otherwise stated)

**Option S(T3)**

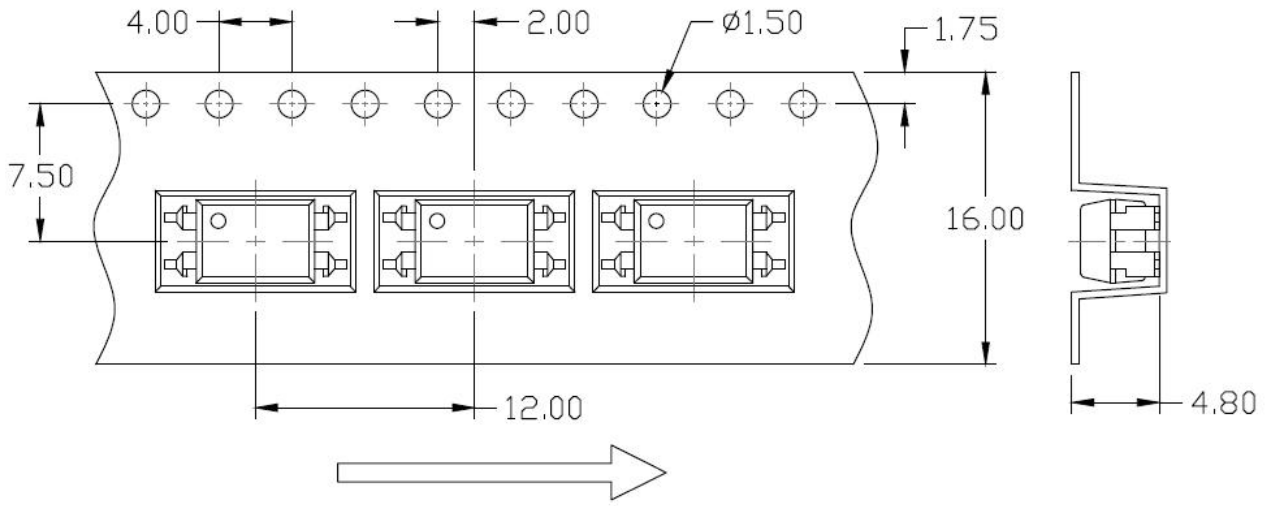


**Option S(T4)**

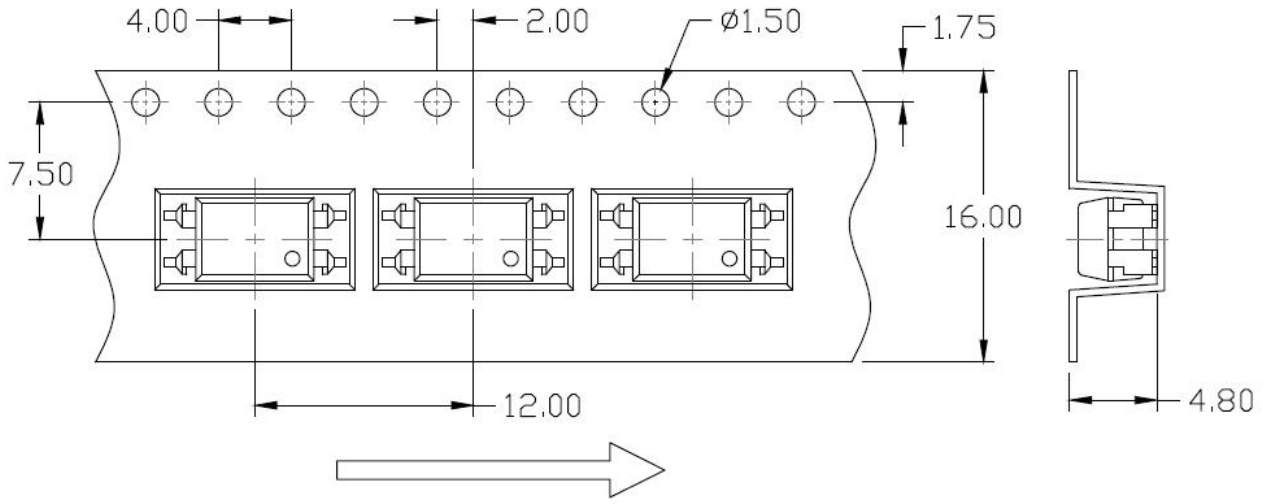

## CARRIER TAPE SPECIFICATIONS (Dimensions in mm unless otherwise stated)

**Option SL(T1)**

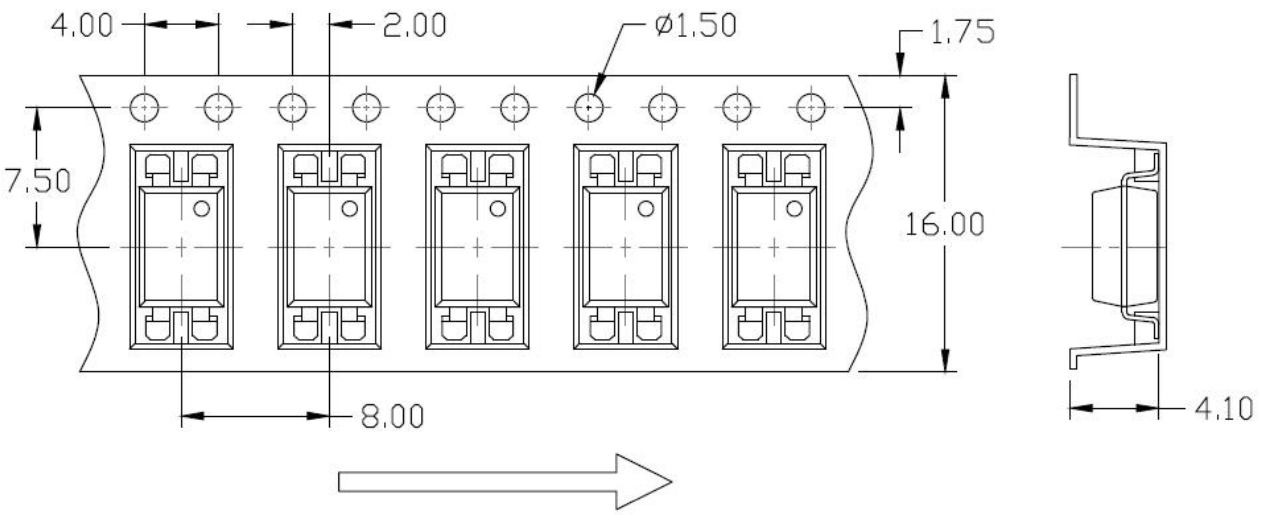


**Option SL(T2)**

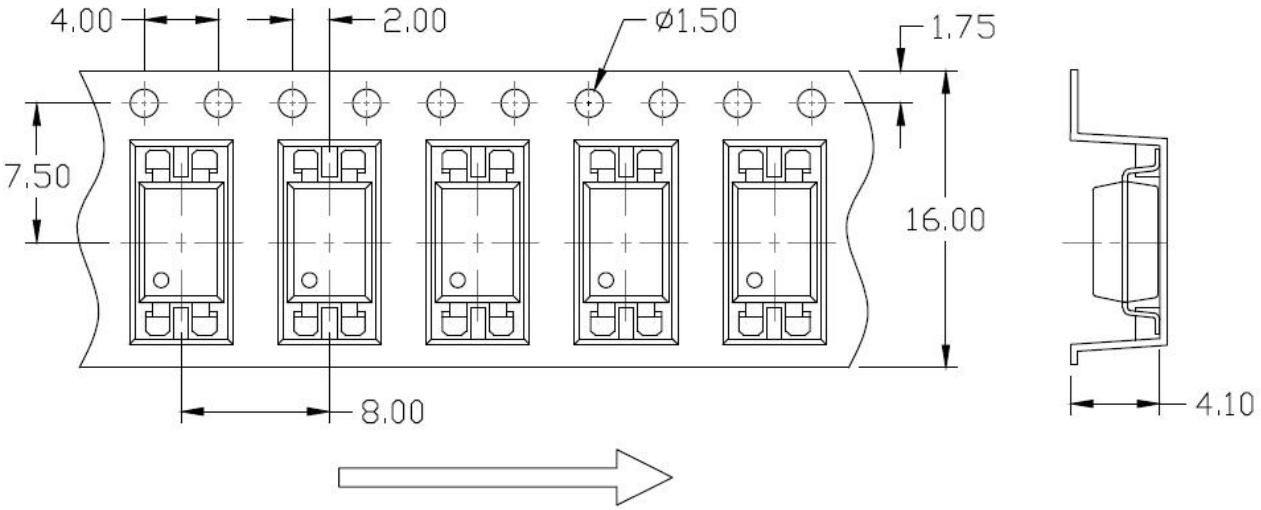

## CARRIER TAPE SPECIFICATIONS (Dimensions in mm unless otherwise stated)

**Option SL(T3)**

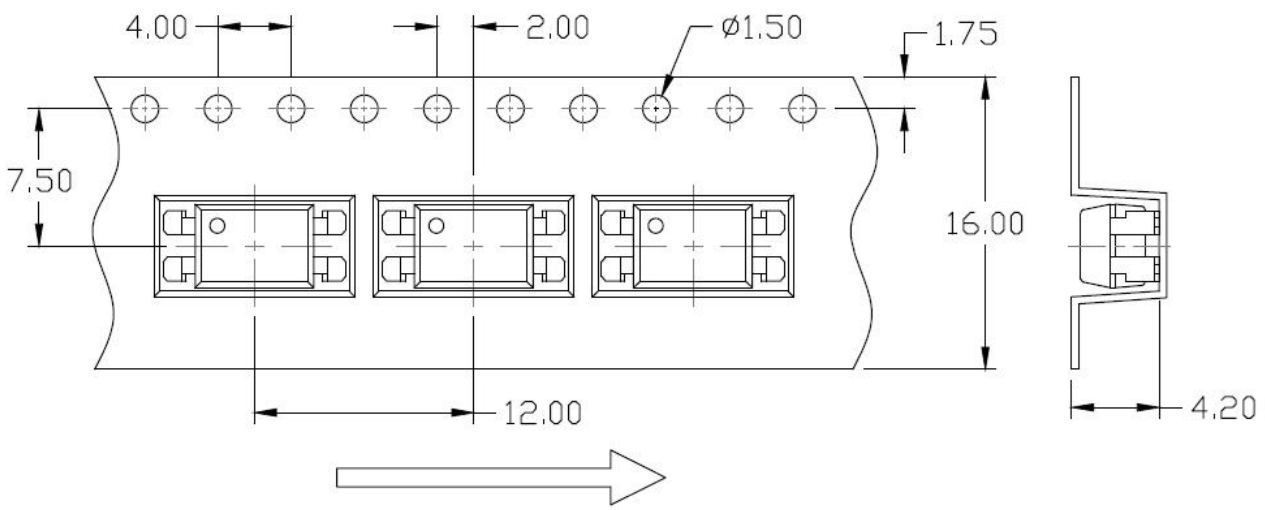


**Option SL(T4)**

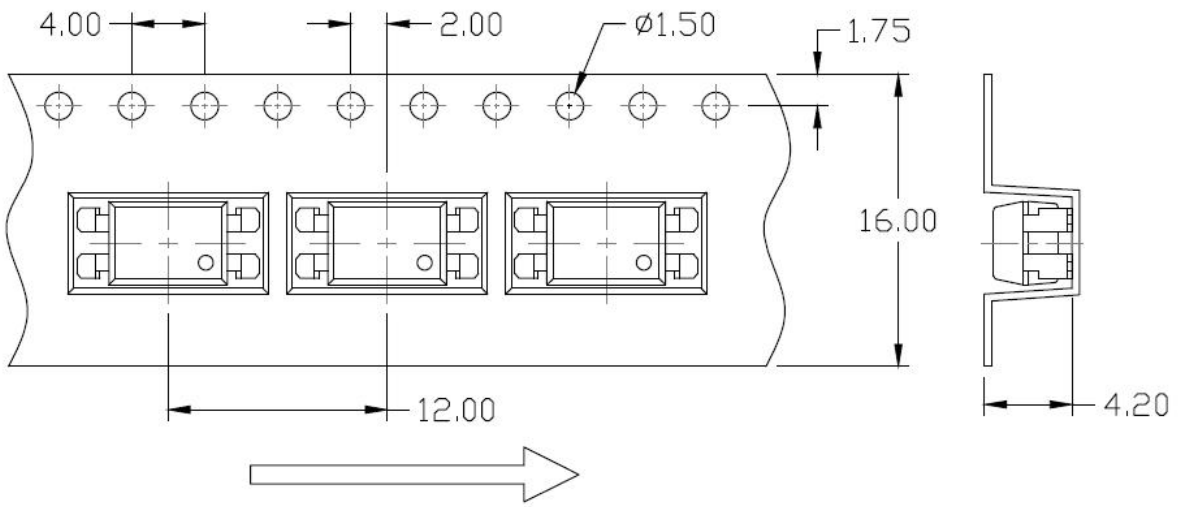

## CARRIER TAPE SPECIFICATIONS (Dimensions in mm unless otherwise stated)

**Option SLM(T1)**

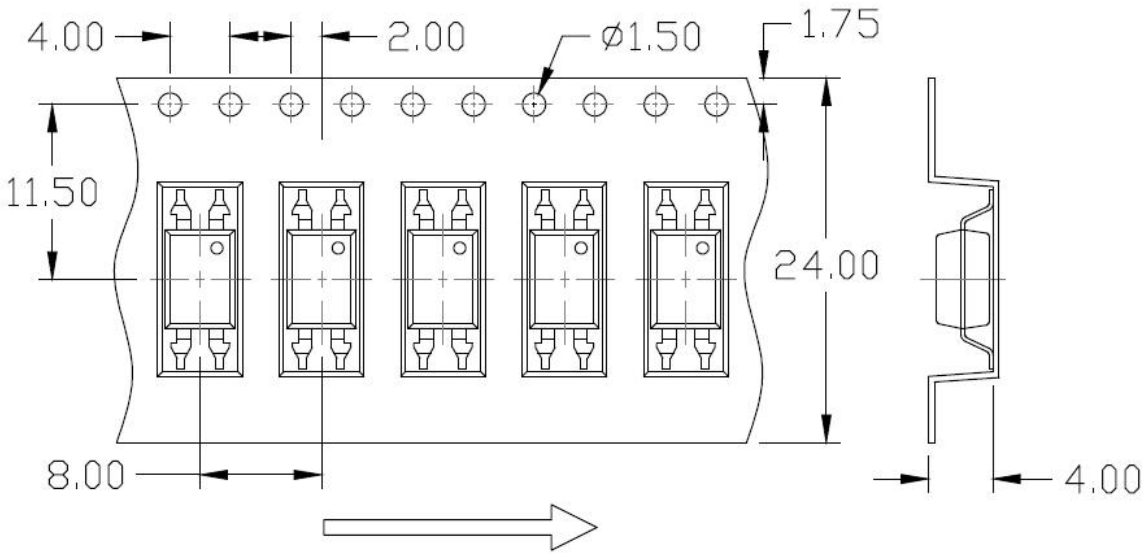


**Option SLM(T2)**

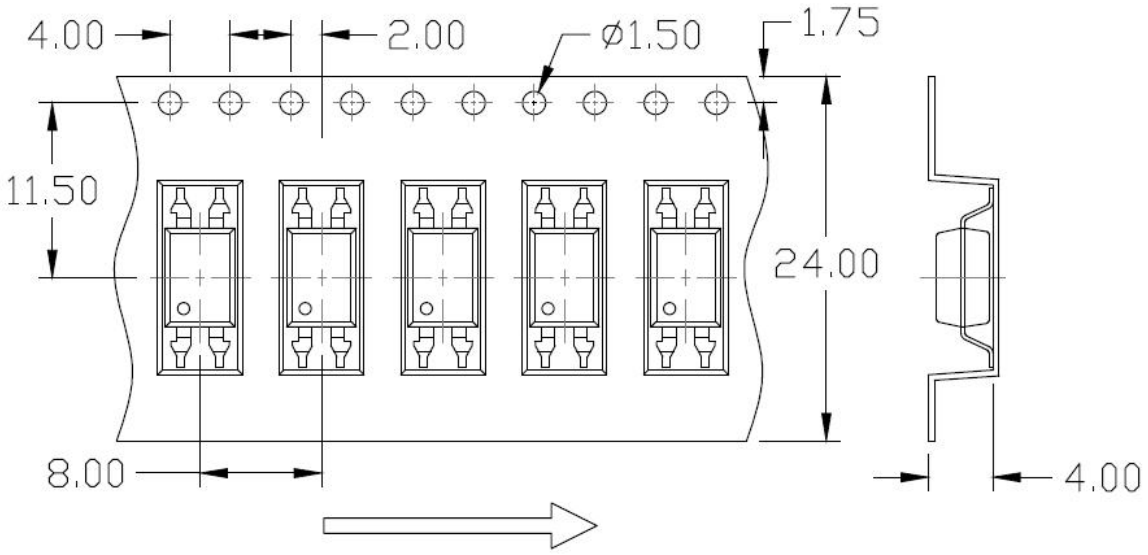

## REEL SPECIFICATIONS (Dimensions in mm unless otherwise stated)

### Option S & Option SL

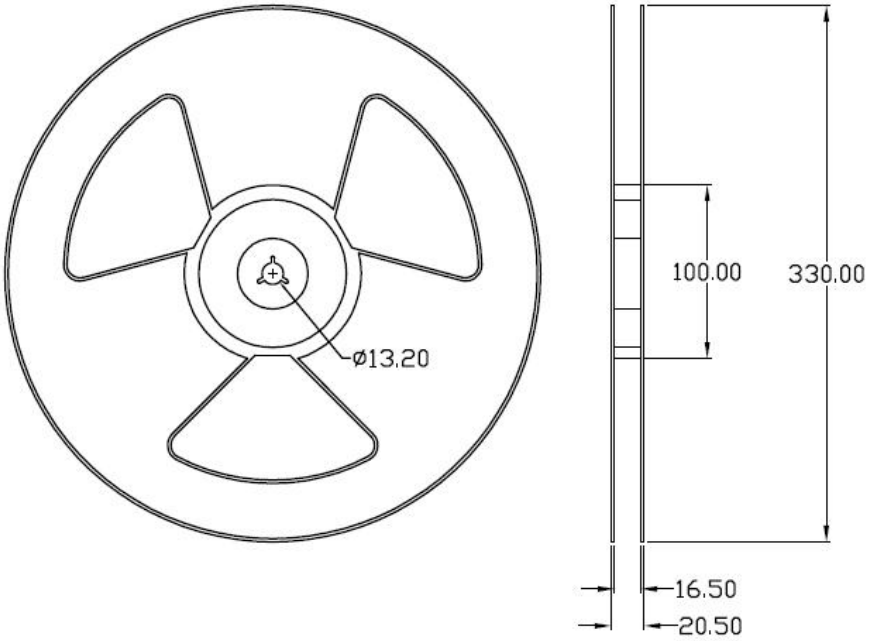


### Option SLM

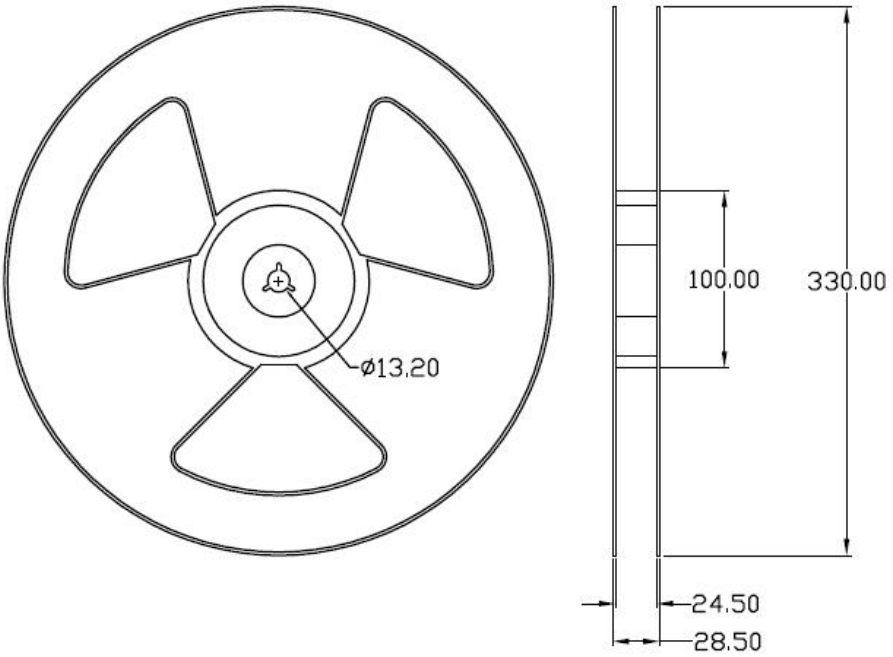

## BOX SPECIFICATIONS (Reel Type)

### Inner Box

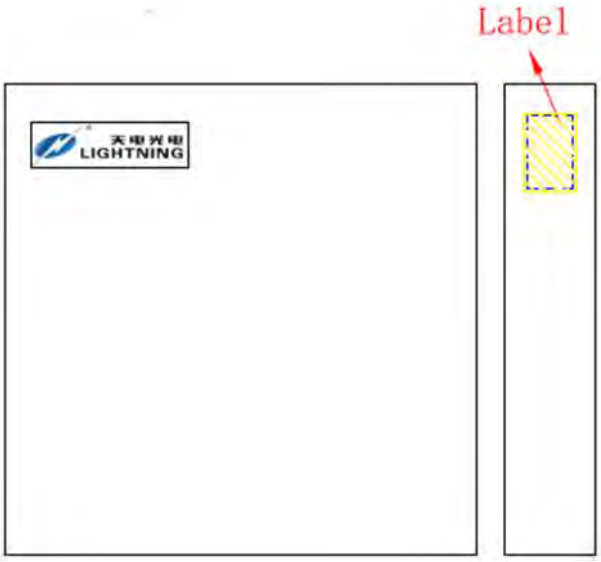


- L x W x H = 36cm x 36cm x 6.9cm

### Outer Box

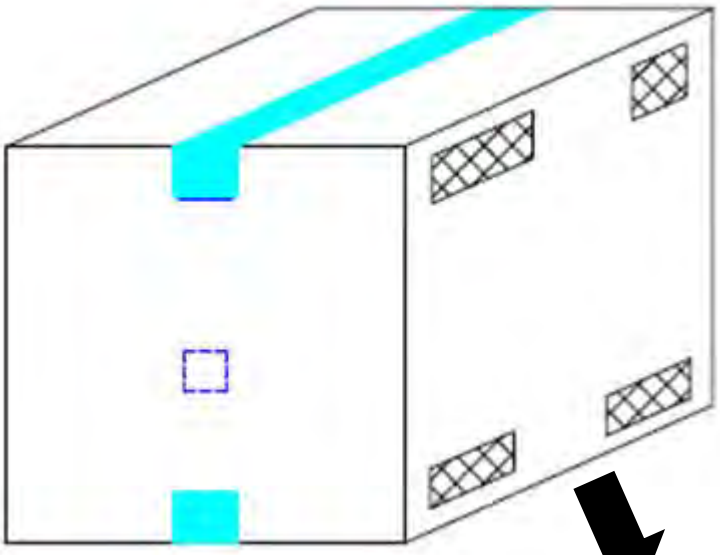

- L x W x H = 45cm x 38cm x 38cm

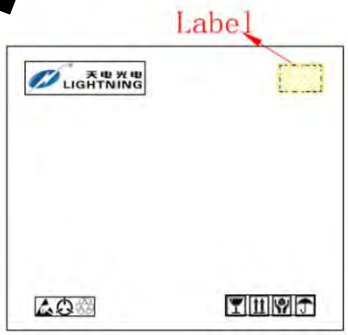

# ORDERING AND MARKING INFORMATION

## MARKING INFORMATION

| | |
|---|---|
| TD | : Company Abbr. |
| 815 | : Part Number |
| V | : VDE Option |
| Y | : Fiscal Year |
| A | : Manufacturing Code |
| WW | : Work Week |

## ORDERING INFORMATION

### ORDERING INFORMATION

**TD815(Y)(Z)-GV**

TD – Company Abbr.
815 – Part Number
Y – Lead Form Option (M/S/SL/SLM/None)
Z – Tape and Reel Option (T1/T2/T3/T4)
G – Green
V – VDE Option (V or None)

### LABEL INFORMATION

## Packing Quantity

| Option | Quantity | Quantity – Inner box | Quantity – Outer box |
|---|---|---|---|
| None | 100 Units/Tube | 32 Tubes/Inner box | 10 Inner box/Outer box = 32k Units |
| M | 100 Units/Tube | 32 Tubes/Inner box | 10 Inner box/Outer box = 32k Units |
| S(T1) | 1500 Units/Reel | 3 Reels/Inner box | 5 Inner box/Outer box = 22.5k Units |
| S(T2) | 1500 Units/Reel | 3 Reels/Inner box | 5 Inner box/Outer box = 22.5k Units |
| S(T3) | 1000 Units/Reel | 3 Reels/Inner box | 5 Inner box/Outer box = 15k Units |
| S(T4) | 1000 Units/Reel | 3 Reels/Inner box | 5 Inner box/Outer box = 15k Units |
| SL(T1) | 1500 Units/Reel | 3 Reels/Inner box | 5 Inner box/Outer box = 22.5k Units |
| SL(T2) | 1500 Units/Reel | 3 Reels/Inner box | 5 Inner box/Outer box = 22.5k Units |
| SL(T3) | 1000 Units/Reel | 3 Reels/Inner box | 5 Inner box/Outer box = 15k Units |
| SL(T4) | 1000 Units/Reel | 3 Reels/Inner box | 5 Inner box/Outer box = 15k Units |
| SLM(T1) | 1500 Units/Reel | 2 Reels/Inner box | 5 Inner box/Outer box = 15k Units |
| SLM(T2) | 1500 Units/Reel | 2 Reels/Inner box | 5 Inner box/Outer box = 15k Units |

## REFLOW INFORMATION

### REFLOW PROFILE

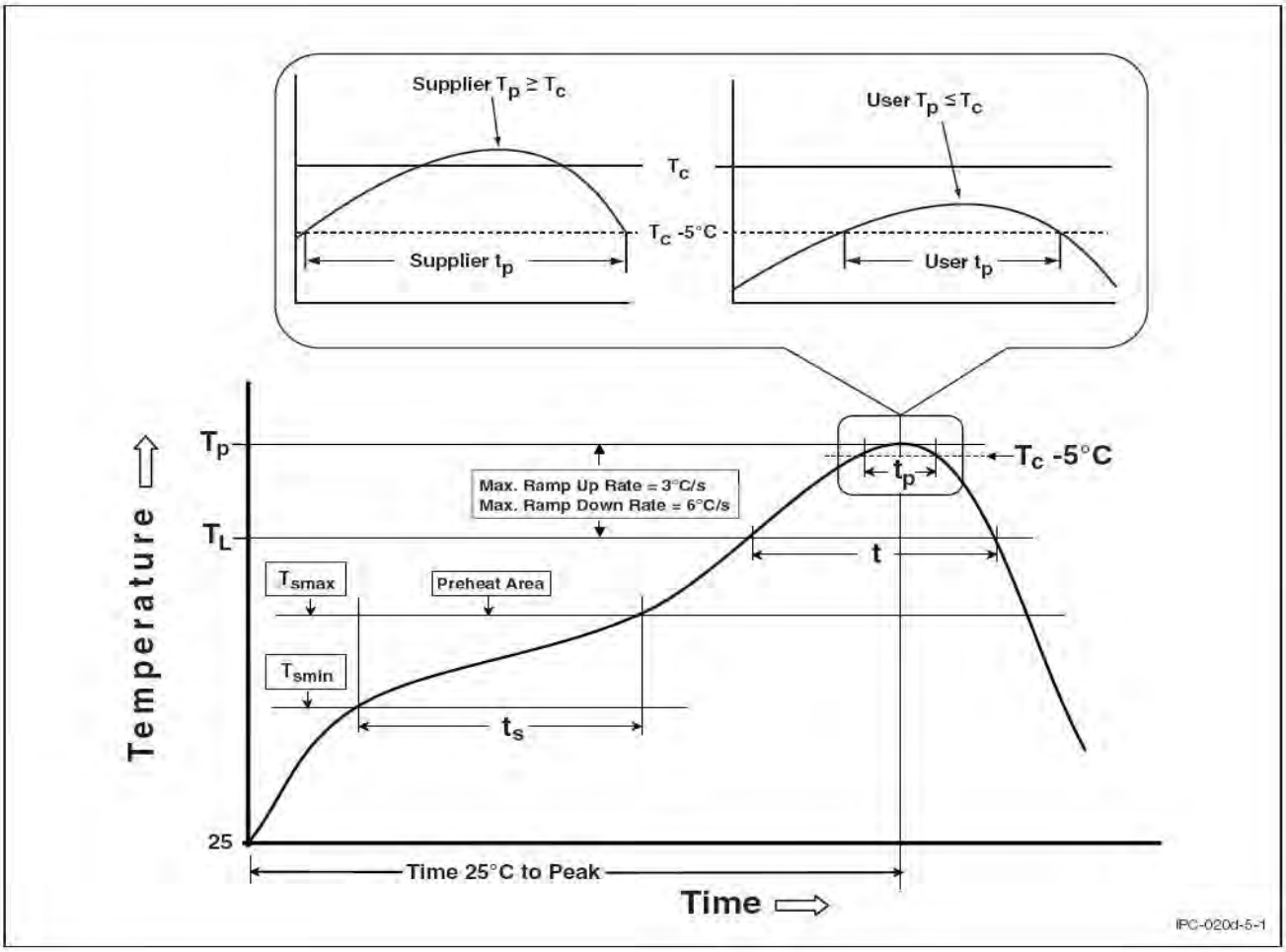


| Profile Feature | Sn-Pb Assembly Profile | Pb-Free Assembly Profile |
|---|---|---|
| Temperature Min. (Tsmin) | 100 | 150°C |
| Temperature Max. (Tsmax) | 150 | 200°C |
| Time (ts) from (Tsmin to Tsmax) | 60-120 seconds | 60-120 seconds |
| Ramp-up Rate (tL to tP) | 3°C/second max. | 3°C/second max. |
| Liquidous Temperature (TL) | 183°C | 217°C |
| Time (tL) Maintained Above (TL) | 60 – 150 seconds | 60 – 150 seconds |
| Peak Body Package Temperature | 235°C +0°C / -5°C | 260°C +0°C / -5°C |
| Time (tP) within 5°C of 260°C | 20 seconds | 30 seconds |
| Ramp-down Rate (TP to TL) | 6°C/second max | 6°C/second max |
| Time 25°C to Peak Temperature | 6 minutes max. | 8 minutes max. |

## TEMPERATURE PROFILE OF SOLDERING

**WAVE SOLDERING (JESD22-A111 COMPLIANT)**

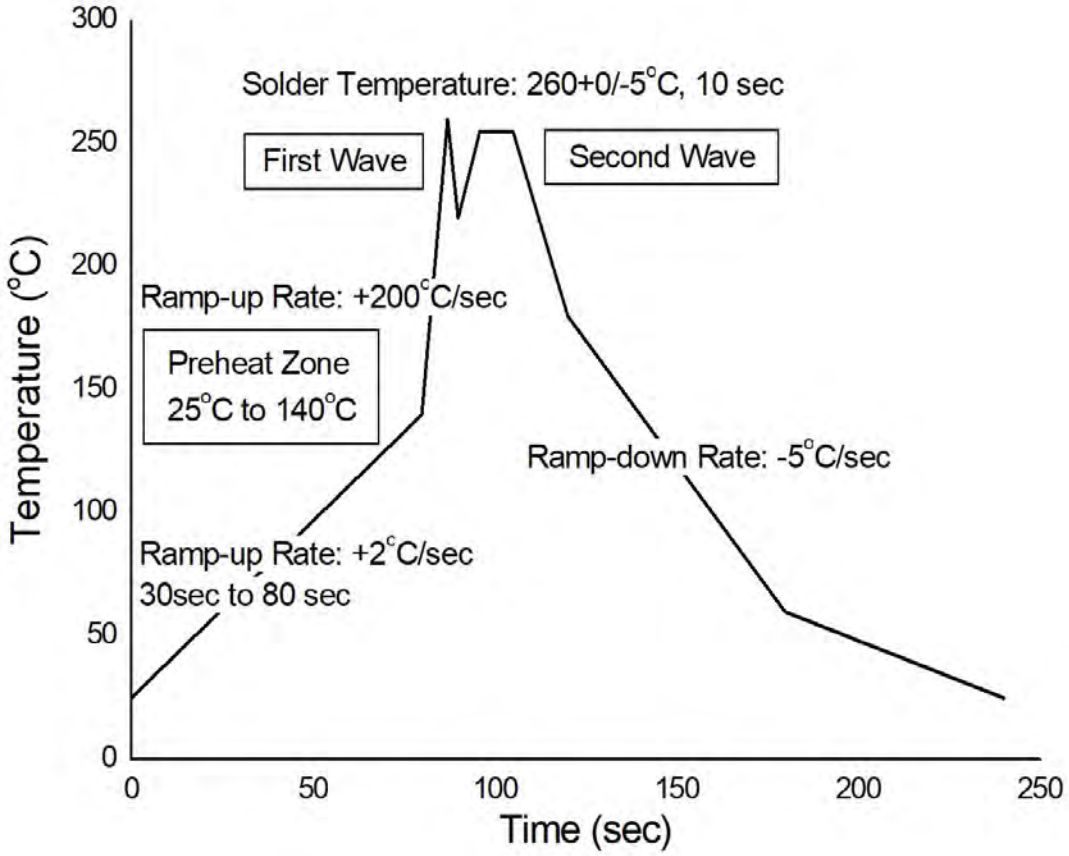


| HAND SOLDERING BY SOLDERING IRON | |
|---|---|
| Soldering Temperature | 380+0/-5°C |
| Soldering Time | 3 sec max. |

- One time soldering is recommended for all soldering method.
- Do not solder more than three times for IR reflow soldering.

## DISCLAIMER

- LIGHTNING is continually improving the quality, reliability, function and design. LIGHTNING reserves the right to make changes without further notices.
- The characteristic curves shown in this datasheet are representing typical performance which are not guaranteed.
- LIGHTNING makes no warranty, representation or guarantee regarding the suitability of the products for any particular purpose or the continuing production of any product. To the maximum extent permitted by applicable law, LIGHTNING disclaims (a) any and all liability arising out of the application or use of any product, (b) any and all liability, including without limitation special, consequential or incidental damages, and (c) any and all implied warranties, including warranties of fitness for particular
- The products shown in this publication are designed for the general use in electronic applications such as office automation, equipment, communications devices, audio/visual equipment, electrical application and instrumentation purpose, non-infringement and merchantability.
- This product is not intended to be used for military, aircraft, automotive, medical, life sustaining or lifesaving applications or any other application which can result in human injury or death.
- Please contact LIGHTNING sales agent for special application request.
- Immerge unit's body in solder paste is not recommended.
- Parameters provided in datasheets may vary in different applications and performance may vary over time. All operating parameters, including typical parameters, must be validated in each customer application by the customer's technical experts. Product specifications do not expand or otherwise modify LIGHTNING's terms and conditions of purchase, including but not limited to the warranty expressed therein.
- Discoloration might be occurred on the package surface after soldering, reflow or long-time use. It neither impacts the performance nor reliability.